Brooksville Florida

Composite Motors

Raw Materials to Raw Power

CAGE: 5LCX3

MADE IN U.S.A.

CMI-6090-05

BATTERY POWERED EQUINE DENTAL FLOAT

Introducing, the Jones Pro Series "Cool Cut" Equine Dental Float.

The first of its kind on the market that is Autoclavable.

The gear motors have been tested and proven to withstand harsh environments such as salt water submersion and extreme ambient temperature conditions. The drivers are hermetically sealed and the entire unit is Class B Autoclavable at 134°C.

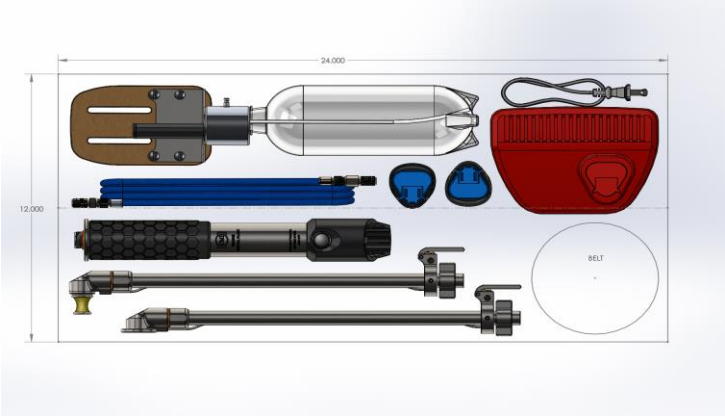

SPECIFICATIONS: Rotary Unit and Attachment

- Voltage: 12V-Standard Lithium hand tool battery.
- Current: 1.5-3.0A Typical.
- Run time: 30 min. with small 1.5Amp hr. battery; 1 hour with large 3.0 Amp hr. battery.*
- RPM: Variable speed 0-7,500 rpm - programmable.
- Standard speed programs: 1,625 rpm. (Low); 3,250 rpm. (Medium); 7,500 rpm. (High) and off in succession.
- Control: Memory Push Button
- Material: Stainless steel, anodized aluminum, high temperature plastic, high temperature rubber.
- Rated temperature: to 135°C (275°F) for sterilization.
- Sterilization: Autoclave, dishwasher (top rack only), mild soap and water wash down.**
- Attachments: Wing nut removable, interchangeable. Various lengths available.
- Cutting Tools: Coated diamond abrasive. Interchangeable wands. ***

*Typical dependent on technique. Time shown is constant run time, although actual duty cycle is normally intermittent.
**With Battery Removed.
***Disc cutting tool is dedicated to one attachment.

Water Pump System

- **Capacity: 1 liter pressure reservoir (approximately 34 oz.) Larger 2 liter reservoir available.**
- **Pressurize method: Hand pump. Initial pumping: 30 pumps. 45-50 pumps total to evacuate the reservoir.**
- **Hose: 6ft. soft rubber with braided jacket.**
- **Fitting: Automatic closure, quick connect, needle valve for flow adjustment. Made with nickel plated brass and stainless steel.**
- **Filtration: Pickup tube screen.**
- **Materials: HDPE reservoir, anodized aluminum housing, stainless steel belt clip and hardware.**

Composite Motors, Inc. ♦ 15446 Flight Path Dr., Brooksville, FL 34604
Phone: (352) 799-2599 ♦ Sales@cmi-south.com ♦ www.compositemotors.com